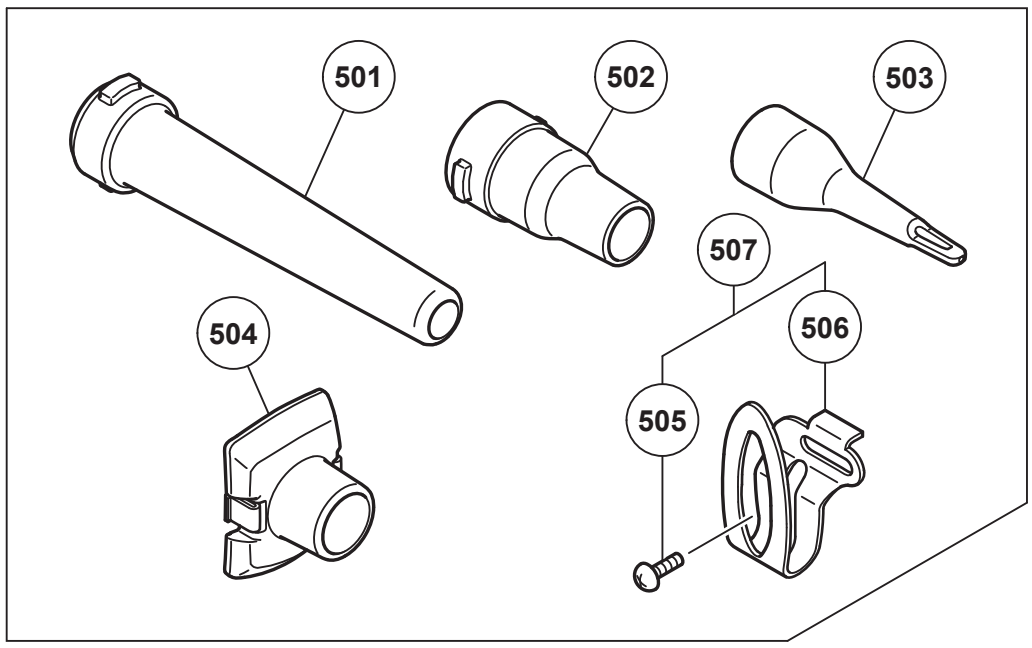

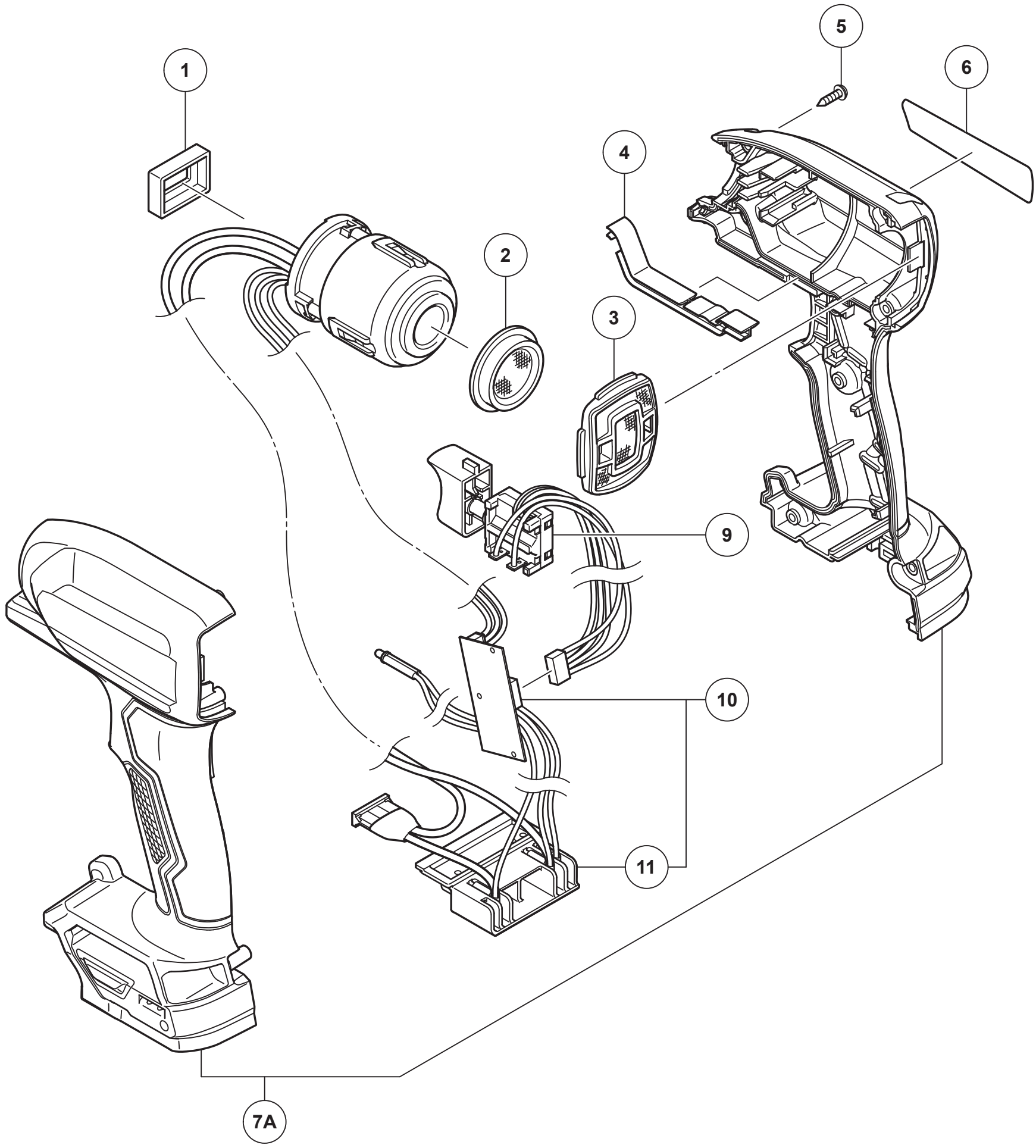

Rev.2
13.4.2023

MODEL
RA18DA

HiKOKI

CORDLESS BLOWER RA18DA

Item No.	Code No.	Description	No. Used	Remarks
1	379031	MOTOR HOLDER (B)	1	
2	379032	MOTOR HOLDER (A)	1	
3	379033	FILTER	1	
4	379034	HOUSING PACKING	1	
5	313687	TAPPING SCREW (W/FLANGE) D3X16 (BLACK)	8	
6		NAME PLATE	1	
7A	379888	HOUSING (A).(B) SET	1	
9	379037	DC-SPEED CONTROL SWITCH	1	
10	379039	WIRING ASS'Y	1	INCLUD.11
11	339769	BATTERY TERMINAL	1	
		STANDARD ACCESSORIES		
501	379040	NOZZLE	1	
502	379041	INFLATION NOZZLE (A)	1	
503	379042	INFLATION NOZZLE (B)	1	
504	379043	DEFLATION ADAPTOR	1	
505	327001	TRUSS HD. SCREW M4 (BLACK)	1	
506	372229	HOOK	1	
507	375800	HOOK SET	1	INCLUD.505,506

* ALTERNATIVE PARTS